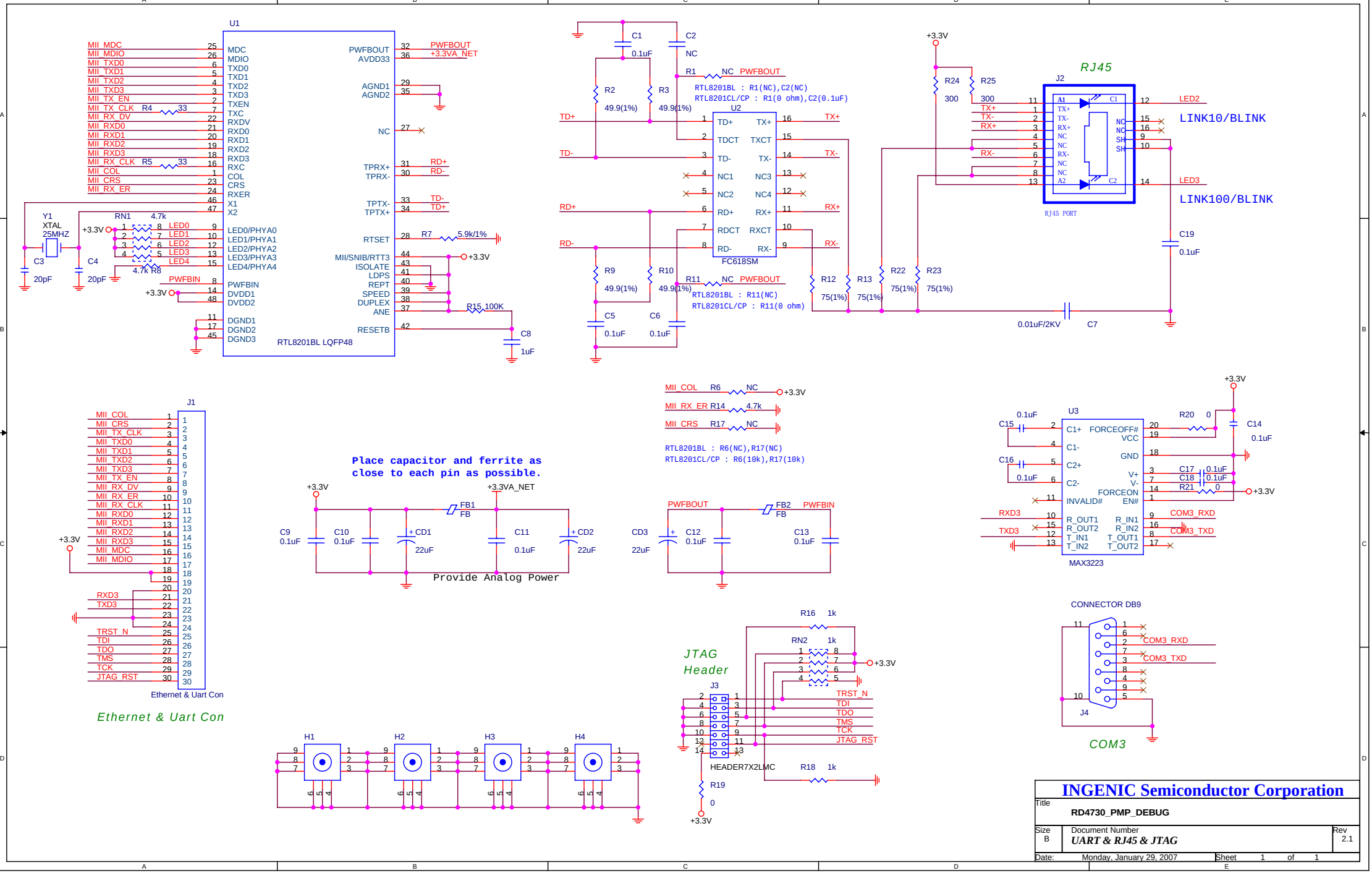
U1
RTL8201BL LQFP48
MII_MDC
MII_MDIO
MII_TXD0
MII_TXD1
MII_TXD2
MII_TXD3
MII_TX_EN
MII_TX_CLK
MII_RX_DV
MII_RXD0
MII_RXD1
MII_RXD2
MII_RXD3
MII_RX_CLK
MII_COL
MII_CRS
MII_RX_ER
PWFBOUT
+3.3VA_NET
RD+
RD-
TD+
TD-
RTSET
R7 5.9k/1%
MII/SNIB/RTT3
ISOLATE
LDPS
REPT
SPEED
DUPLEX
ANE
R15 100K
RESETB
C8 1uF
Y1 XTAL 25MHZ
C3 20pF
C4 20pF
RN1 4.7k
LED0
LED1
LED2
LED3
LED4
PWFBIN
C1 0.1uF
C2 NC
R1 NC PWFBOUT
RTL8201BL : R1(NC),C2(NC)
RTL8201CL/CP : R1(0 ohm),C2(0.1uF)
R2 49.9(1%)
R3 49.9(1%)
U2
FC618SM
R9 49.9(1%)
R10 49.9(1%)
R11 NC PWFBOUT
RTL8201BL : R11(NC)
RTL8201CL/CP : R11(0 ohm)
C5 0.1uF
C6 0.1uF
R12 75(1%)
R13 75(1%)
R22 75(1%)
R23 75(1%)
R24 300
R25 300
RJ45
J2
RJ45 PORT
LED2
LINK10/BLINK
LED3
LINK100/BLINK
C19 0.1uF
0.01uF/2KV C7
J1
Ethernet & Uart Con
Ethernet & Uart Con
MII_COL R6 NC
MII_RX_ER R14 4.7k
MII_CRS R17 NC
RTL8201BL : R6(NC),R17(NC)
RTL8201CL/CP : R6(10k),R17(10k)
Place capacitor and ferrite as
close to each pin as possible.
FB1 FB
FB2 FB
C9 0.1uF
C10 0.1uF
CD1 22uF
C11 0.1uF
CD2 22uF
CD3 22uF
C12 0.1uF
C13 0.1uF
Provide Analog Power
U3
MAX3223
C15 0.1uF
C16 0.1uF
R20 0
C14 0.1uF
C17 0.1uF
C18 0.1uF
R21 0
RXD3
TXD3
COM3_RXD
COM3_TXD
CONNECTOR DB9
J4
COM3
JTAG Header
J3
HEADER7X2LMC
R16 1k
RN2 1k
R18 1k
R19 0
TRST_N
TDI
TDO
TMS
TCK
JTAG_RST
H1
H2
H3
H4
INGENIC Semiconductor Corporation
Title
RD4730_PMP_DEBUG
Size B
Document Number
UART & RJ45 & JTAG
Rev 2.1
Date: Monday, January 29, 2007
Sheet 1 of 1